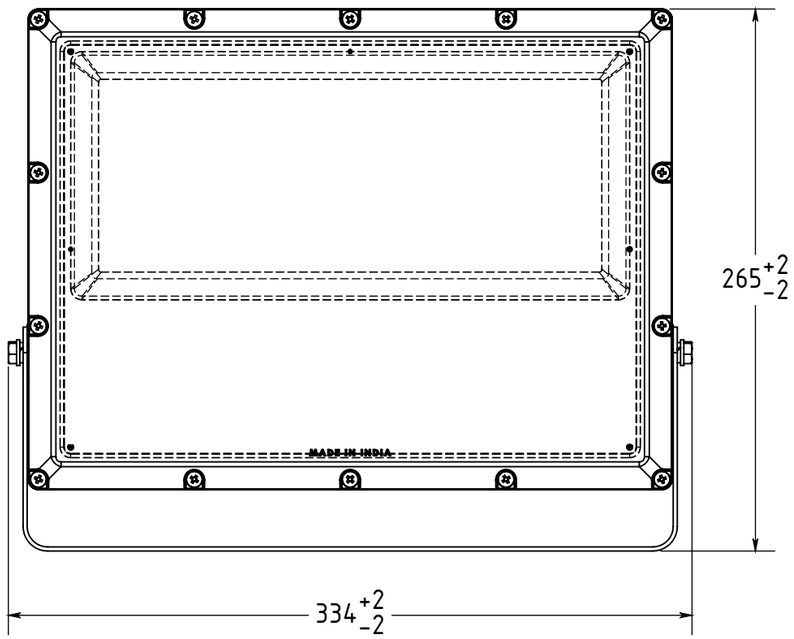

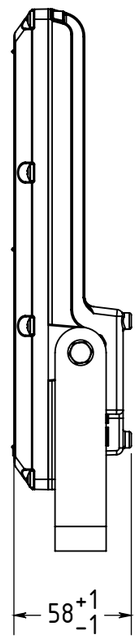

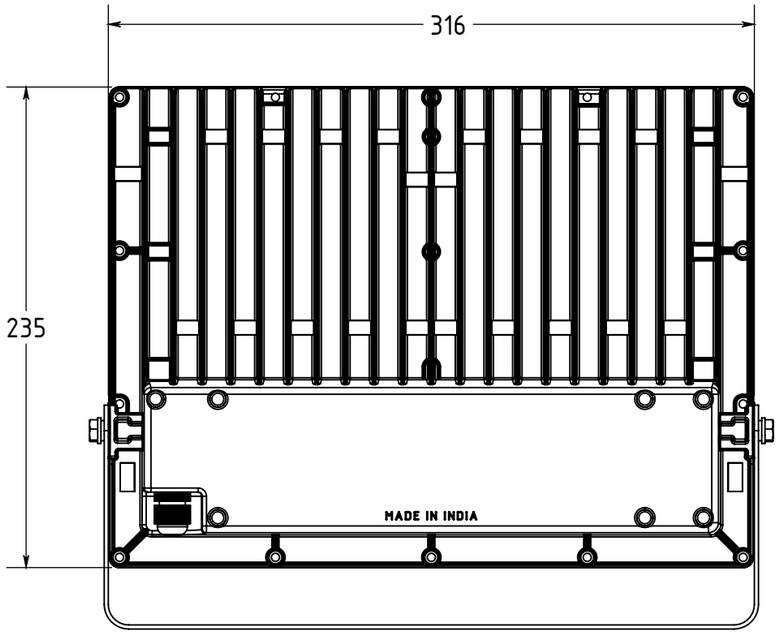

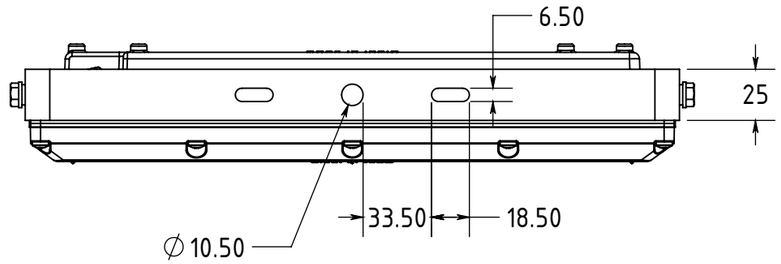

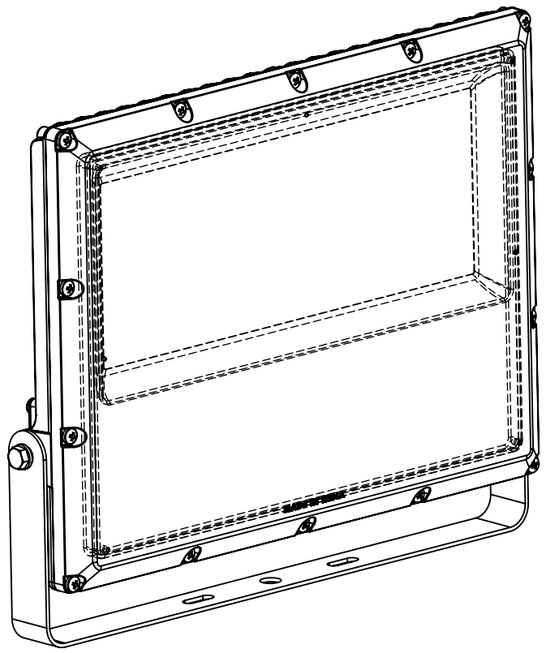

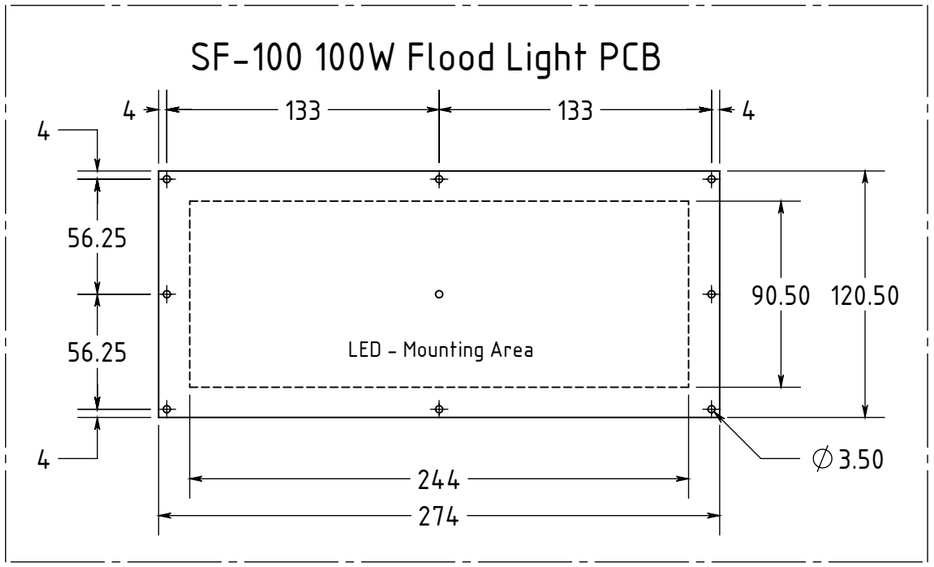

Dimension : 265 x 334 x 58
Driver Area : 246 x 65 x 44
PCB : As per Drg.

DO NOT SCALE DRAWING	REVISION
SF-100 100W	
UNLESS OTHERWISE SPECIFIED: DIMENSIONS ARE IN MILLIMETERS INFORMATION PROVIDED ABOVE SUBJECT TO CHANGE WITHOUT NOTICE.	A4
SCALE:1:3	SHEET 1 OF 1